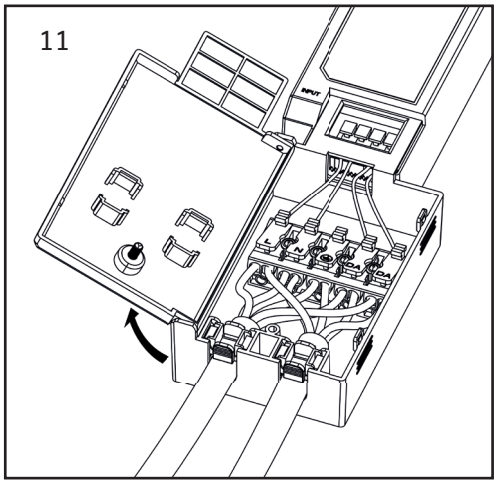

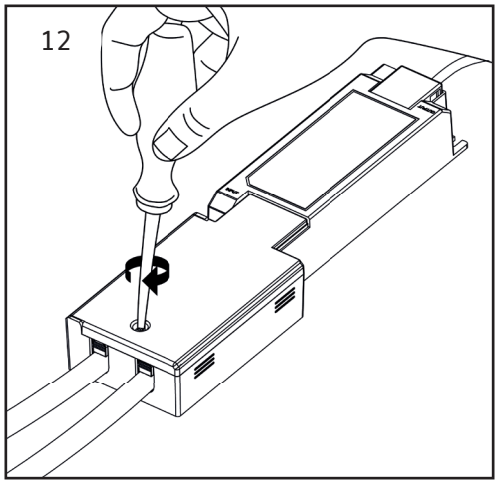

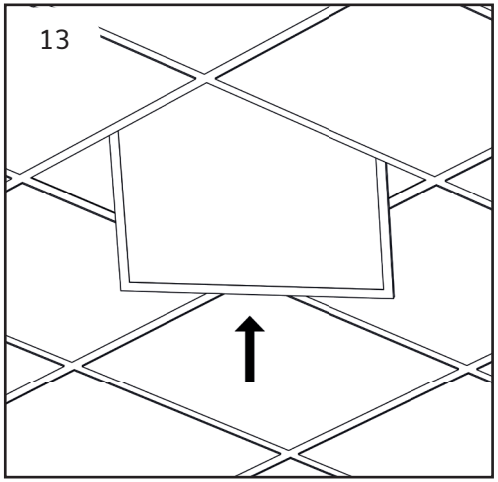

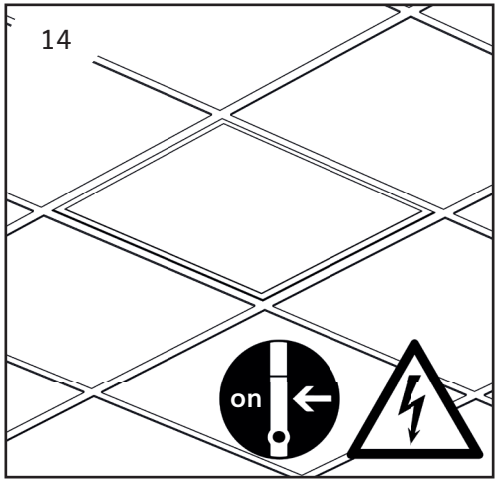

1x 2x 3x ... nx		B10	B16	C10	C16	DALI	t_c
onework LUX 600 TW DALI	○	n=18	n=28	n=29	n=47	BOKE BK-DWL040E-A1050ADP	< 90°
onework LUX 600 TW DALI	●	n=18	n=28	n=29	n=47	BOKE BK-DWL040E-A1050ADP	< 90°
onework LUX 625 TW DALI	○	n=18	n=28	n=29	n=47	BOKE BK-DWL040E-A1050ADP	< 90°
onework LUX 625 TW DALI	●	n=18	n=28	n=29	n=47	BOKE BK-DWL040E-A1050ADP	< 90°

onework GmbH

Koboldstraße 4 | 24118 Kiel | Germany | www.onework.de

onework LUX 600/625 TW DALI

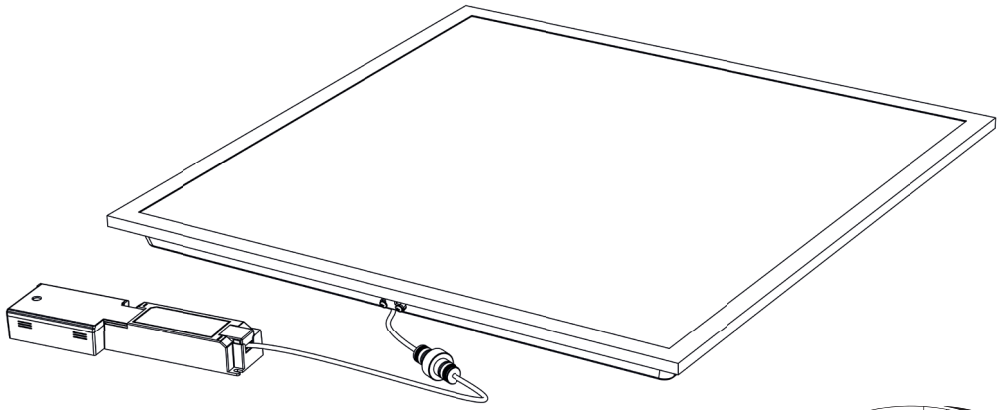

		EAN	LxWxH [mm]	W	V_{AC}	Hz	lm	lm/W
onework LUX 600 TW DALI	○	4262520990070	595x595x35	32	220–240	50–60	4200	>130
onework LUX 600 TW DALI	●	4262520990094	595x595x35	32	220–240	50–60	4200	>130
onework LUX 625 TW DALI	○	4262520990001	620x620x35	32	220–240	50–60	4300	>130
onework LUX 625 TW DALI	●	4262520990148	620x620x35	32	220–240	50–60	4300	>130

		K	IP	IK	⊿	R_a	°C	PF	kg
onework LUX 600 TW DALI	○	2700–6500	20	03	95°	85	-20...+40	> 0,95	2,22
onework LUX 600 TW DALI	●	2700–6500	20	03	95°	85	-20...+40	> 0,95	2,22
onework LUX 625 TW DALI	○	2700–6500	20	03	95°	85	-20...+40	> 0,95	2,50
onework LUX 625 TW DALI	●	2700–6500	20	03	95°	85	-20...+40	> 0,95	2,50

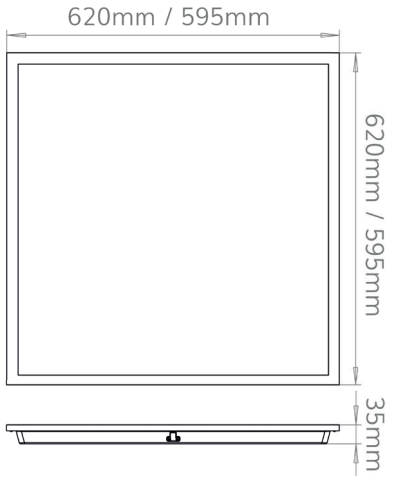
620mm / 595mm
620mm / 595mm
35mm

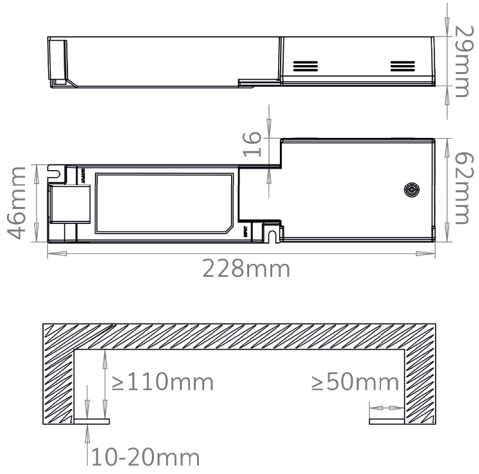
29mm
16
62mm
46mm
228mm
≥110mm
≥50mm
10-20mm

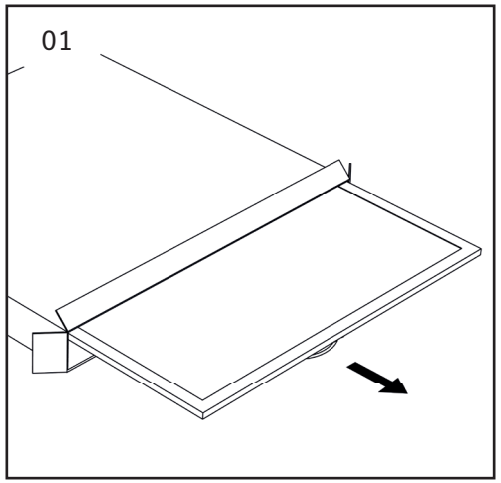
01

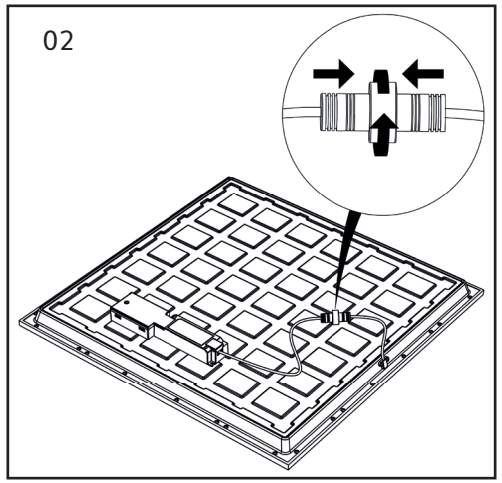
02

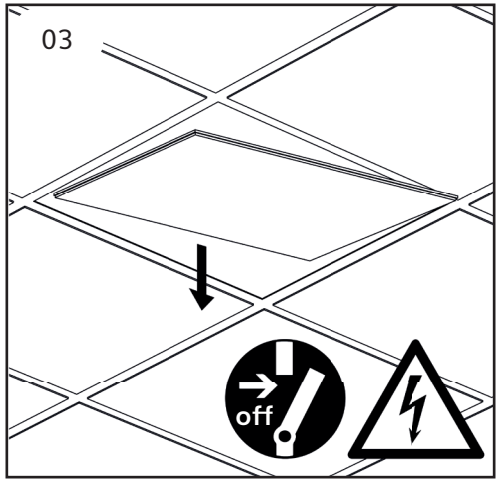
03
off

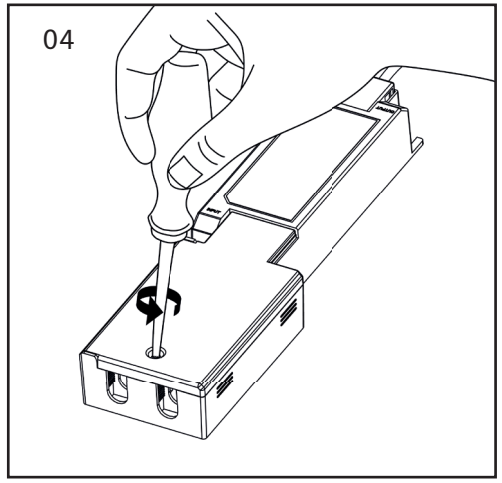
04

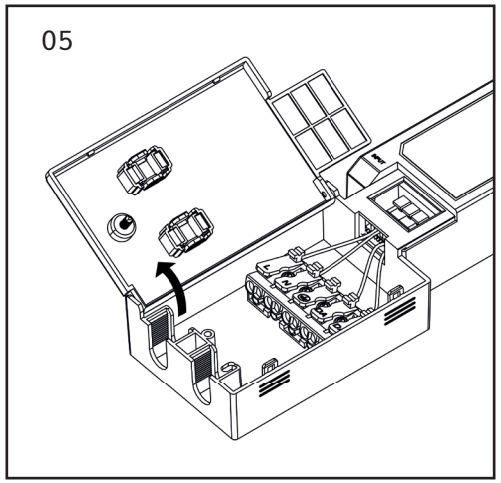
05

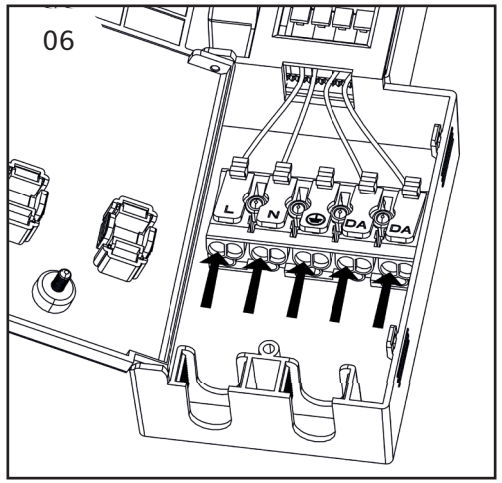
06
L
N
DA
DA

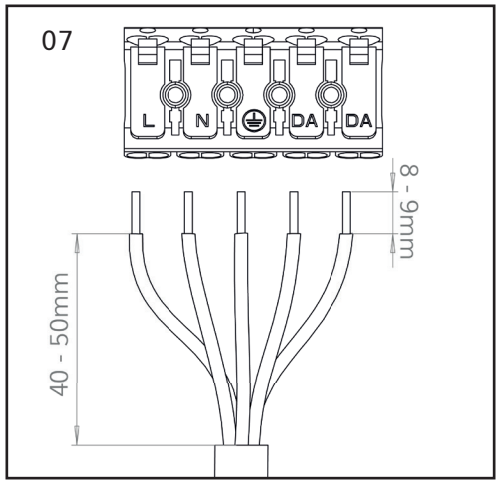
07
L
N
DA
DA
8 - 9mm
40 - 50mm

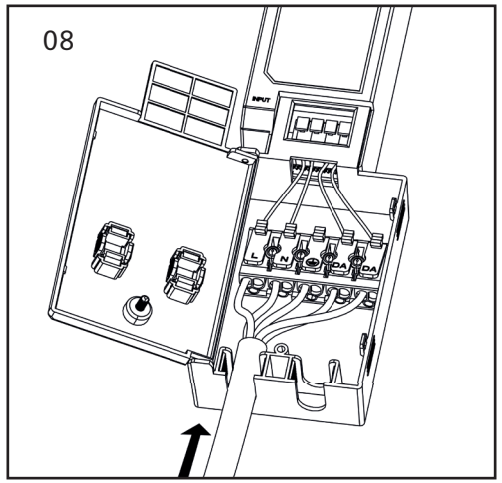
08

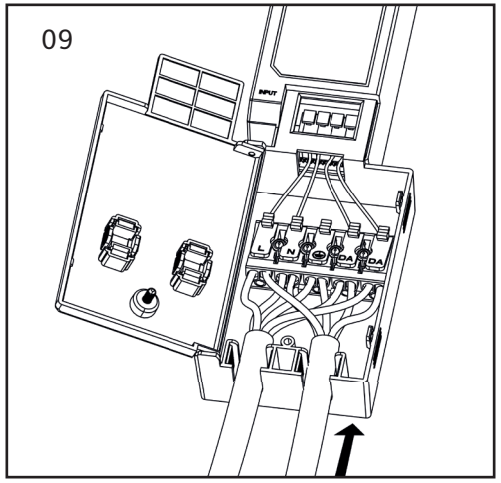
09

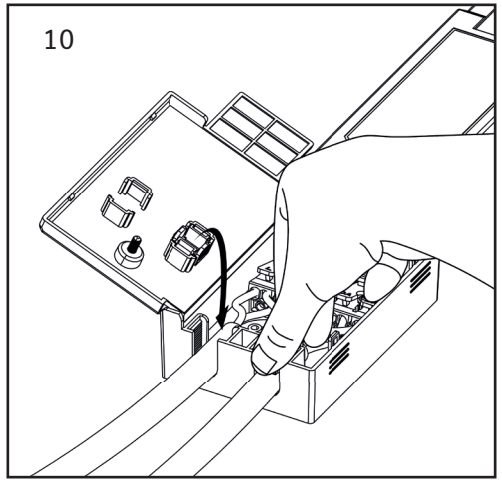
10